1 Allée des Bouleaux -F-95110 SANNOIS
+33 (0)1 39 98 55 00
info@restagraf.com

J-CASE MICRO FUSE 32V 40A

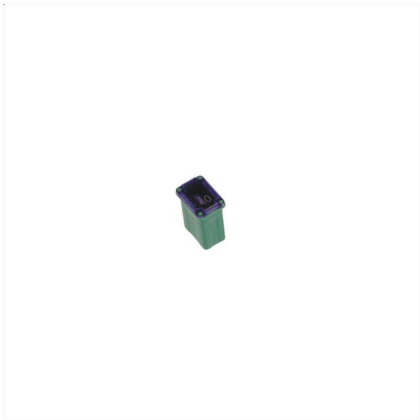

Item code	Number of References	Number of pieces	Conditioning
17364	1	2	BAG

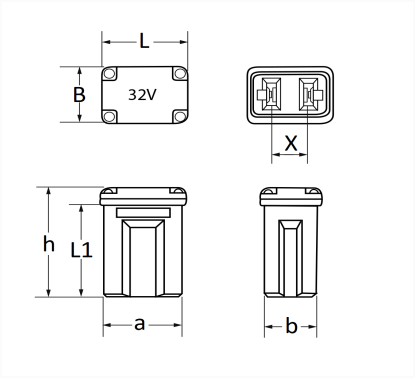

Technical informations	
L	10.7 mm
B	7.7 mm
X	4.6 mm
h	15 mm
L1	12.5 mm
a	9.7 mm
b	6.2 mm
Intens.	40 A

Manufacturer correspondence*			
FORD Engineering number	DG9T14A094EA	FORD Engineering number	GU5T14G592BJA
FORD Finis	2270688	FORD Finis	5218979
HONDA	38231S04961	HYUNDAI	1879004934
KIA	1879004934	LAND ROVER	LR078006
SUBARU	82211AL04A	VOLVO	31346535

Manufacturer correspondence*

* Non contractual information given as indication