1 Allée des Bouleaux -F-95110 SANNOIS
+33 (0)1 39 98 55 00
info@restagraf.com

J-CASE MICRO FUSE 32V 20A

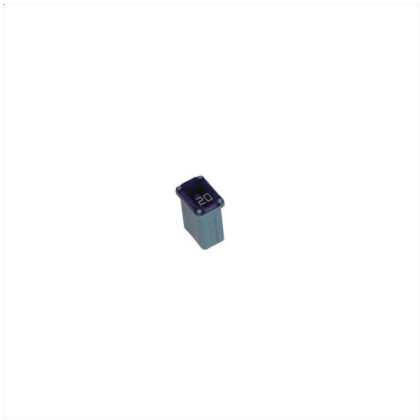

Item code	Number of References	Number of pieces	Conditioning
17361	1	2	BAG

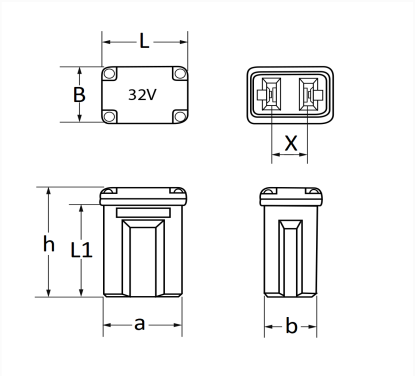

Technical informations	
L	10.7 mm
B	7.7 mm
X	4.6 mm
h	15 mm
L1	12.5 mm
a	9.7 mm
b	6.2 mm
Intens.	20 A

Manufacturer correspondence*			
FORD Engineering number	DG9T14A094BA	FORD Engineering number	GU5T14G592BFA
FORD Finis	2270680	FORD Finis	5218975
HONDA	38231S10003	LAND ROVER	LR078003
OPEL (GM) Catalog number	13586654	OPEL Part number	13586654

Manufacturer correspondence*	
VOLVO	31346532

* Non contractual information given as indication