1 Allée des Bouleaux -F-95110 SANNOIS
+33 (0)1 39 98 55 00
info@restagraf.com

B TYPE MALE JAPANESE FUSE 50A

Item code	Number of References	Number of pieces	Conditioning
17111	1	2	BAG
225066	1	1	BLISTER

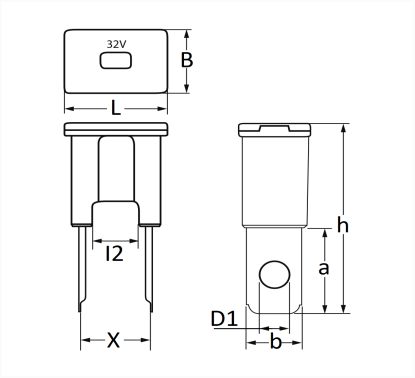

Technical informations	
L	22.2 mm
B	15.2 mm
h	45 mm
l2	10 mm
X	15 mm
D1	6.5 mm
b	12 mm
a	20.5 mm
Intens.	50 A

Manufacturer correspondence*			
HYUNDAI	9182333000	HYUNDAI	9182333200
KIA	K991021050	TOYOTA	9098208228

* Non contractual information given as indication