1 Allée des Bouleaux -F-95110 SANNOIS
+33 (0)1 39 98 55 00
info@restagraf.com

PLATTE ZEKERING LP MINI 58V 30A



Item code	Number of References	Number of pieces	Conditioning
17069	1	5	

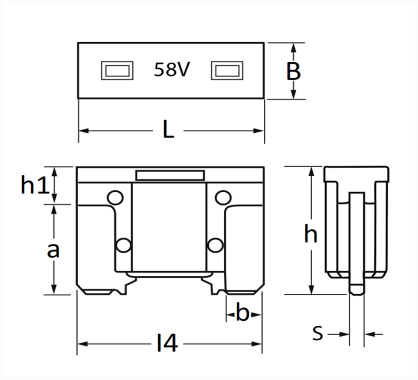

Technical informations	
L	10.9 mm
B	3.8 mm
h	8.8 mm
h1	2.6 mm
a	6.2 mm
b	2.2 mm
l4	10.9 mm
s	0.8 mm
Intens.	30 A

Manufacturer correspondence*			
CHEVROLET - DAEWOO	95986482	HONDA	38221SNAA81
HYUNDAI	1879001112	HYUNDAI	1879001120
KIA	1879001112	KIA	1879001120
MAZDA	997051330	NISSAN	243198993A
NISSAN	243198993B	OPEL (GM) Catalogusnummer	4819110

Manufacturer correspondence*			
OPEL (GM) Catalogusnummer	6238666	OPEL (GM) Onderdeelnummer	19116050
OPEL (GM) Onderdeelnummer	95986482	PEUGEOT / CITROËN	1612447180
RENAULT	243198993A	SUBARU	82210AJ300
SUZUKI	0948130504	TOYOTA	9008082054
TOYOTA	9098209025		

* Non contractual information given as indication