1 Allée des Bouleaux -F-95110 SANNOIS
+33 (0)1 39 98 55 00
info@restagraf.com

KRIMPLASMOF 4 → 6 mm²

Item code	Number of References	Number of pieces	Conditioning
17023	1	15	
225023	1	8	
317023	1	25	

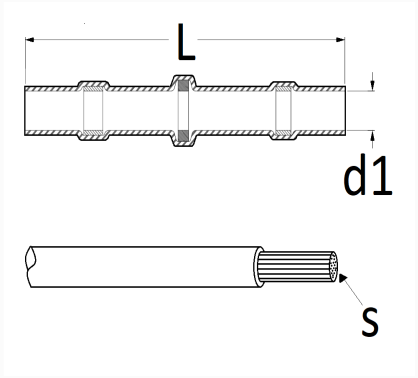

Technical informations	
L	42 mm
d1	6 mm
s	4 → 6 mm²