1 Allée des Bouleaux -F-95110 SANNOIS
+33 (0)1 39 98 55 00
info@restagraf.com

PLASTIC TUIT Ø 4,5 mm MONOGRAM

Item code	Number of References	Number of pieces	Conditioning
1261	1	20	

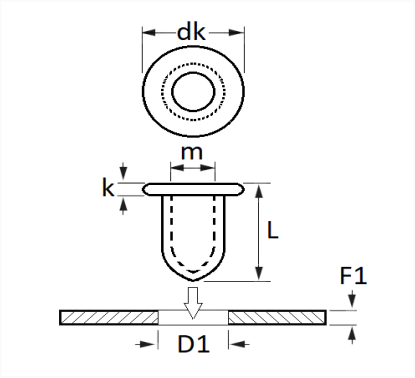

Technical informations	
dk	8 mm
k	1.4 mm
L	12.5 mm
m	Pion / Rotule Ø 5.5 mm
D1	7 mm
F1	0.7 → 1 mm

Materials
THERMOPLASTISCH ELASTOMEER

Manufacturer correspondence*			
NISSAN	7688100QAA	RENAULT	7703081151

* Non contractual information given as indication