1 Allée des Bouleaux -F-95110 SANNOIS
+33 (0)1 39 98 55 00
info@restagraf.com

POSITIVE BATTERY TERMINAL M8 WITH CLAWS

Item code	Number of References	Number of pieces	Conditioning
10284	1	15	BOX
225102	1	1	HANGING BOX

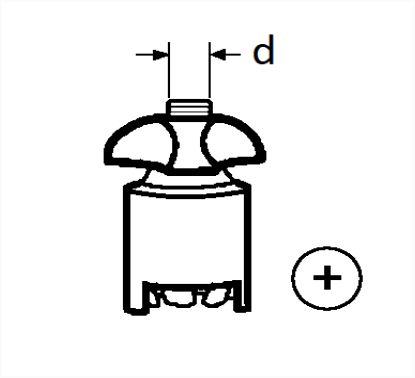

Technical informations	
d	8 mm