1 Allée des Bouleaux -F-95110 SANNOIS
+33 (0)1 39 98 55 00
info@restagraf.com

NEGATIVE BATTERY TERMINAL M8 MAN TYPE

Item code	Number of References	Number of pieces	Conditioning
10283	1	15	BOX
225101	1	1	HANGING BOX
555115	1	12	BAG

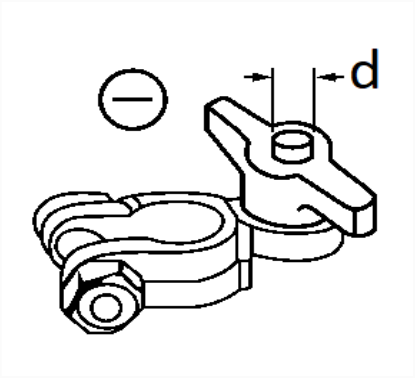

Technical informations	
d	8 mm