1 Allée des Bouleaux -F-95110 SANNOIS
+33 (0)1 39 98 55 00
info@restagraf.com

STEEL RIVET Ø 4,8 X 11 mm WINDOW LIFTER MECHANISM

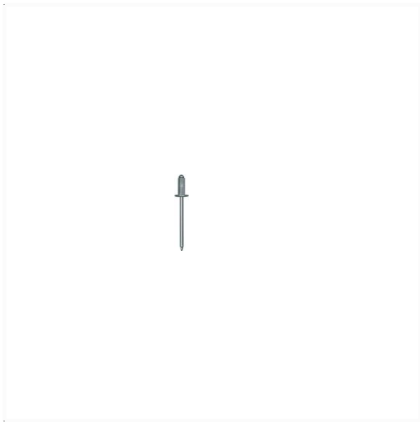

Item code	Number of References	Number of pieces	Conditioning
4080	1	80	BAG

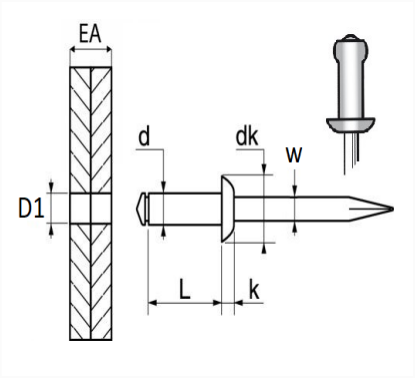

Technical informations	
d	4.8 mm
L	11 mm
dk	9.5 mm
k	2 mm
w	2.9 mm
EA	4 → 6 mm
D1	5 mm

Materials
STEEL

Manufacturer correspondence*			
OPEL (GM) Catalog number	2084170	OPEL Part number	11086102

*Non contractual information given as indication