1 Allée des Bouleaux -F-95110 SANNOIS
+33 (0)1 39 98 55 00
info@restagraf.com

POSITIVE BATTERY TERMINAL M8-1.25 LOW TYPE ARELCO

Item code	Number of References	Number of pieces	Conditioning
10280	1	15	TRUCK BOX
225104	1	1	BLISTER

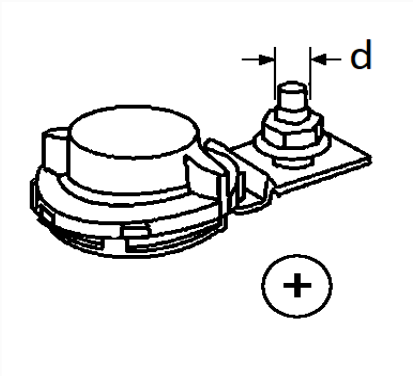

Technical informations	
d	8 mm

Manufacturer correspondence*	
PEUGEOT / CITROËN	561552

* Non contractual information given as indication