1 Allée des Bouleaux -F-95110 SANNOIS
+33 (0)1 39 98 55 00
info@restagraf.com

POSITIVE BATTERY TERMINAL 50 mm² DOUBLE LOCK

Item code	Number of References	Number of pieces	Conditioning
10276	1	25	BOX
225097	1	1	BLISTER
555110	1	12	BAG

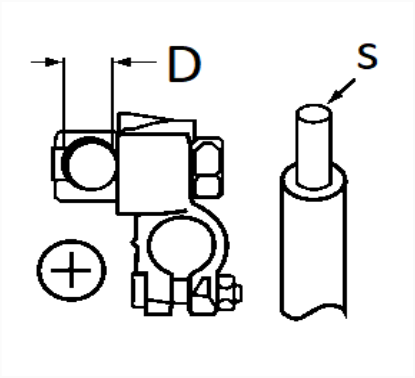

Technical informations	
D	13 mm
s	50 mm²

Materials
BRASS