1 Allée des Bouleaux -F-95110 SANNOIS
+33 (0)1 39 98 55 00
info@restagraf.com

3 POSITIONS FEMALE CONNECTEUR 6,35 SERIES

Item code	Number of References	Number of pieces	Conditioning
6984	1	2	BAG

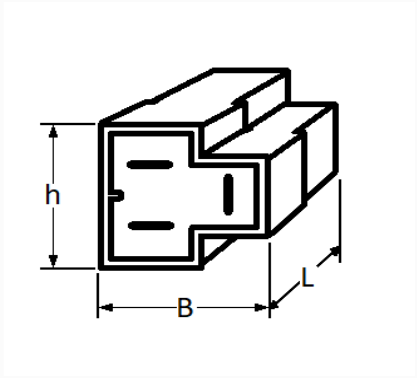

Technical informations	
L	32.2 mm
B	19.7 mm
h	15.2 mm

Materials
POLYAMIDE 66