1 Allée des Bouleaux -F-95110 SANNOIS
+33 (0)1 39 98 55 00
info@restagraf.com

SET OF BATTERY TERMINALS M8 MAN TYPE

Item code	Number of References	Number of pieces	Conditioning
6956	2	2	BAG

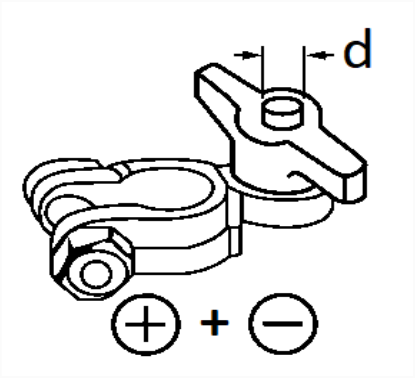

Technical informations	
d	8 mm