1 Allée des Bouleaux -F-95110 SANNOIS
+33 (0)1 39 98 55 00
info@restagraf.com

GLASS FUSE 10A 6,3 X 32 mm

Item code	Number of References	Number of pieces	Conditioning
6863	1	10	BAG
226863	1	5	BLISTER

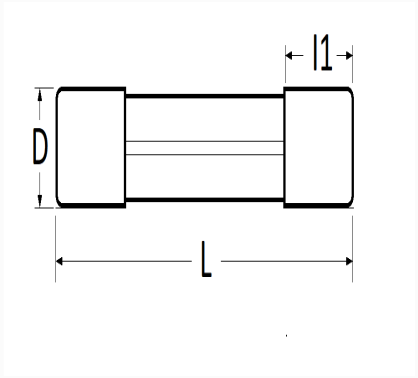

Technical informations	
L	31.8 mm
D	6.35 mm
l1	6.2 mm
Intens.	10 A

Manufacturer correspondence*			
CITROËN	95493196	TOYOTA	9911862910

* Non contractual information given as indication