1 Allée des Bouleaux -F-95110 SANNOIS
+33 (0)1 39 98 55 00
info@restagraf.com

GLASS FUSE 2A 5 X 20 mm

Item code	Number of References	Number of pieces	Conditioning
6851	1	10	BAG
226851	1	5	BLISTER

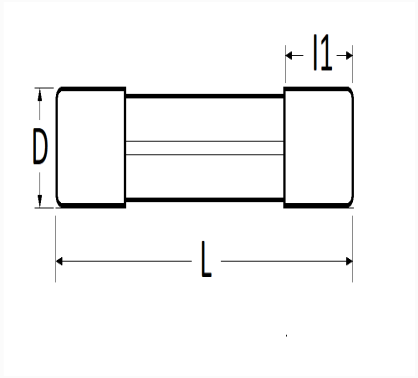

Technical informations	
L	20 mm
D	5 mm
l1	5.1 mm
Intens.	2 A

Manufacturer correspondence*			
OPEL (GM) Catalog number	1786100	OPEL Part number	90018299

* Non contractual information given as indication