1 Allée des Bouleaux -F-95110 SANNOIS
+33 (0)1 39 98 55 00
info@restagraf.com

BLADE FUSE MINI 32V 2A

Item code	Number of References	Number of pieces	Conditioning
6848	1	10	BAG
226848	1	5	BLISTER
306848	1	50	BOX

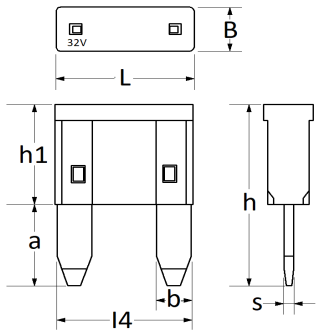

Technical informations	
L	11.1 mm
B	3.9 mm
h	16.2 mm
h1	8.9 mm
a	7.3 mm
b	2.8 mm
l4	10.8 mm
s	0.82 mm
Intens.	2 A

Materials
ZINC

Manufacturer correspondence*			
AUDI	N10261505	CHEVROLET - DAEWOO	12191645

Manufacturer correspondence*			
CUPRA	N10261505	FORD Engineering number	1L3T14A094AA
FORD Finis	4350807	JAGUAR	T2H36053
JAGUAR	T2R30804	LAND ROVER	LR078007
MERCEDES-BENZ	N000000007694	MERCEDES-BENZ	N000000008705
OPEL (GM) Catalog number	1247589	OPEL (GM) Catalog number	4808330
OPEL (GM) Catalog number	6238035	OPEL Part number	12191645
OPEL Part number	9199941	OPEL Part number	96821199
RENAULT	7700410569	RENAULT	7703297149
SEAT	N10261505	SKODA	N10261505
TOYOTA	9098209015	VOLKSWAGEN	N10261505

* Non contractual information given as indication