1 Allée des Bouleaux -F-95110 SANNOIS
+33 (0)1 39 98 55 00
info@restagraf.com

BLADE FUSE MINI 32V 4A

Item code	Number of References	Number of pieces	Conditioning
6840	1	10	BAG
306840	1	50	BOX

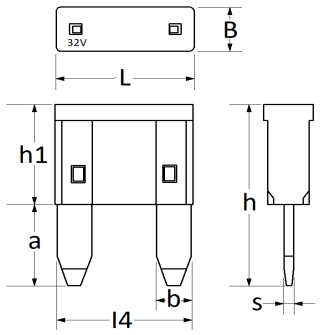

Technical informations	
L	11.1 mm
B	3.9 mm
h	16.2 mm
h1	8.9 mm
a	7.3 mm
b	2.8 mm
l4	10.8 mm
s	0.82 mm
Intens.	4 A

Materials
ZINC

Manufacturer correspondence*			
B.M.W	61136917400	FORD Engineering number	1L3T14A094CA

Manufacturer correspondence*			
FORD Finis	4418457	MINI	61136917400
VOLKSWAGEN	N10261504		

* Non contractual information given as indication