Restagraf
1 Allée des Bouleaux -F-95110 SANNOIS
+33 (0)1 39 98 55 00
info@restagraf.com

NYLONKÄFIGMUTTER M8-1.25



Item code	Number of References	Number of pieces	Conditioning
1147	1	8	BEUTEL

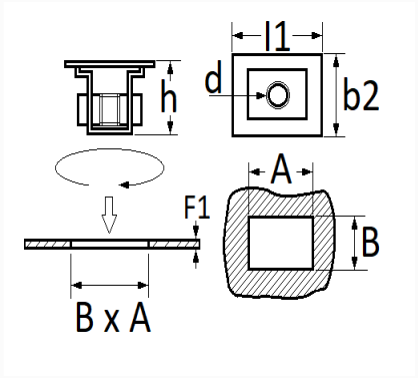

Technical informations	
l1	24.6 mm
b2	16.2 mm
h	13.5 mm
d	M8 x 1.25
B	12.2 mm
A	19 mm
F1	0.4 → 3.6 mm

Materials
POLYAMD UND STAHL

Manufacturer correspondence*			
RENAULT	7703044098	RENAULT	7703044185

* Non contractual information given as indication