Restagraf
1 Allée des Bouleaux -F-95110 SANNOIS
+33 (0)1 39 98 55 00
info@restagraf.com

KÄFIGMUTTER NYLON M6-1.00



Item code	Number of References	Number of pieces	Conditioning
1144	1	12	BEUTEL

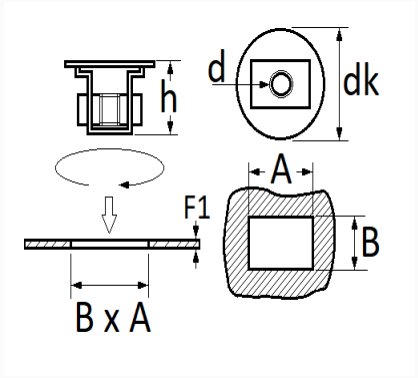

Technical informations	
dk	19 mm
h	11 mm
d	M6 x 1.00
B	11.2 mm
A	11.2 mm
F1	0.5 → 3.5 mm

Materials
NYLON-STAHL

Manufacturer correspondence*			
FIAT	9642166880	LANCIA	9642166880

Manufacturer correspondence*			
NISSAN	0146600Q0B	PEUGEOT / CITROËN	6941C5
PEUGEOT / CITROËN	7481GP	RENAULT	7703044101
RENAULT	7703044187		

* Non contractual information given as indication