1 Allée des Bouleaux -F-95110 SANNOIS
+33 (0)1 39 98 55 00
info@restagraf.com

METALLKÄFIGMUTTER M5-0.80



Item code	Number of References	Number of pieces	Conditioning
1143	1	25	BEUTEL

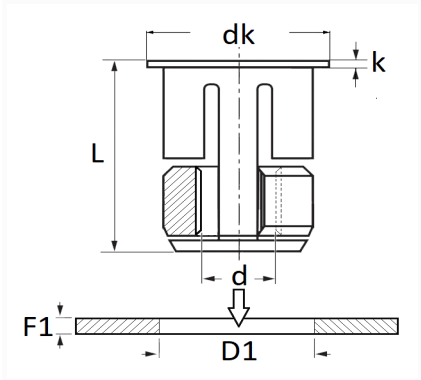

Technical informations	
dk	10.2 mm
k	0.5 mm
L	11 mm
d	M5 x 0.80
D1	8.6 mm
F1	0.7 → 3 mm

Materials
STAHL