1 Allée des Bouleaux -F-95110 SANNOIS
+33 (0)1 39 98 55 00
info@restagraf.com

U-NUT CLIP Ø 4,2 mm

Item code	Number of References	Number of pieces	Conditioning
1132	1	25	BAG

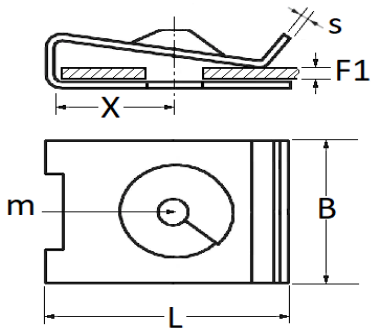

Technical informations	
L	19 mm
B	9 mm
X	12 mm
s	0.6 mm
F1	0.8 → 1.5 mm
m	Vis à Tôle Ø 4.2 mm

Materials
STEEL

Manufacturer correspondence*	
RENAULT	7703046023

* Non contractual information given as indication