1 Allée des Bouleaux -F-95110 SANNOIS
+33 (0)1 39 98 55 00
info@restagraf.com

U-NUT CLIP Ø 4,2 mm

Item code	Number of References	Number of pieces	Conditioning
1131	1	30	BAG

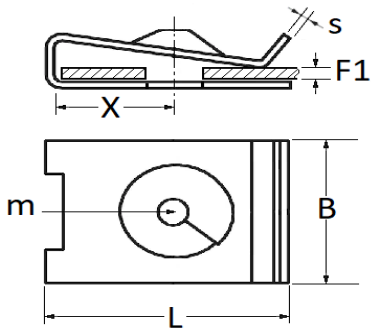

Technical informations	
L	12.3 mm
B	9.5 mm
X	6.5 mm
s	0.6 mm
F1	0.7 → 3 mm
m	Vis à Tôle Ø 4.2 mm

Materials
STEEL

Manufacturer correspondence*			
NISSAN	0122100QAL	NISSAN	0124100Q0D

Manufacturer correspondence*			
RENAULT	7703046143	RENAULT	8200631390
VOLVO	1060576	VOLVO	995728

* Non contractual information given as indication