1 Allée des Bouleaux -F-95110 SANNOIS
+33 (0)1 39 98 55 00
info@restagraf.com

DRAIN PLUG WITH SEALING RING M12-1,75 X 25 mm

Item code	Number of References	Number of pieces	Conditioning
221508	1	1	BLISTER

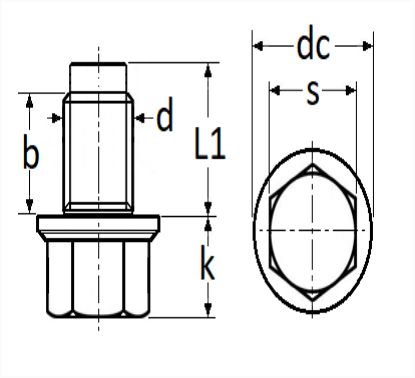

Technical informations	
s	15 mm
k	13 mm
dc	27 mm
L1	25 mm
b	17 mm
d	M12 x 1.75

Materials
STEEL

Manufacturer correspondence*			
ALFA ROMEO	71739255	CHEVROLET - DAEWOO	11562588

Manufacturer correspondence*			
FIAT	71739255	FORD Engineering number	9L8Z6730A
FORD Engineering number	9LE86730AA	FORD Engineering number	EJ7Z6730B
FORD Engineering number	FJ7E6730BA	FORD Finis	2505995
FORD Finis	4948795	JAGUAR	AJ813123
LAND ROVER	LR025048	MAZDA	CY0110404
OPEL (GM) Catalog number	652736	OPEL (GM) Catalog number	652884
OPEL Part number	11518377	OPEL Part number	11519408
OPEL Part number	11519933	OPEL Part number	11562588
SAAB	11562588	VOLVO	31359503

* Non contractual information given as indication