1 Allée des Bouleaux -F-95110 SANNOIS
+33 (0)1 39 98 55 00
info@restagraf.com

PANEL CLIP Ø 8 mm

Item code	Number of References	Number of pieces	Conditioning
130237	1	8	BAG

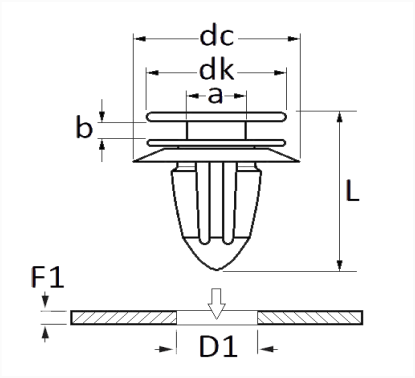

Technical informations	
dk	13.2 mm
dc	18 mm
b	2.3 mm
a	4.2 mm
L	29.1 mm
D1	8 mm
F1	0.65 → 1.9 mm

Materials
POLYACETAL & ELASTOMER

Manufacturer correspondence*			
ALFA ROMEO	51987251	CHRYSLER - JEEP	51987251

Manufacturer correspondence*	
FIAT	51987251

* Non contractual information given as indication