1 Allée des Bouleaux -F-95110 SANNOIS
+33 (0)1 39 98 55 00
info@restagraf.com

MOULDING CLIP Ø 8,5 mm ROCKER PANEL AND FENDER FLARE

Item code	Number of References	Number of pieces	Conditioning
130216	1	8	BAG

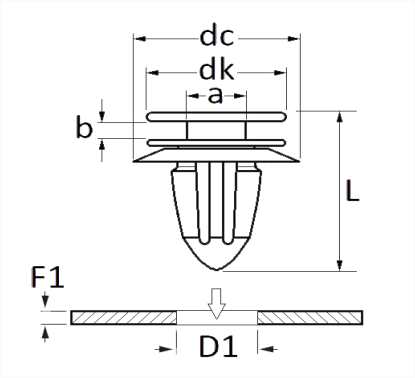

Technical informations	
dk	13 mm
dc	18 mm
b	2 mm
a	5.5 mm
L	16 mm
D1	8.5 mm
F1	0.7 → 1.6 mm

Materials
POLYACETAL COPOLYMER

Manufacturer correspondence*	
TOYOTA	9046709234

* Non contractual information given as indication