1 Allée des Bouleaux -F-95110 SANNOIS
+33 (0)1 39 98 55 00
info@restagraf.com

PLASTIC RIVET Ø 6,3 → 6,8 mm

Item code	Number of References	Number of pieces	Conditioning
130214	1	10	BAG

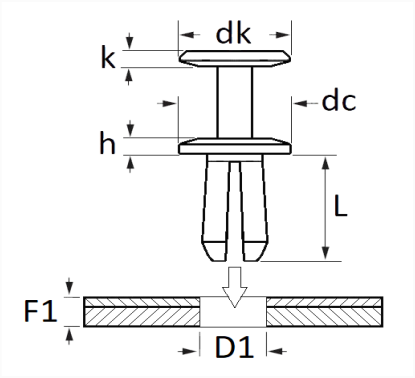

Technical informations	
dk	10 mm
k	1.5 mm
dc	17.8 mm
h	3 mm
L	22.8 mm
D1	6.3 → 6.8 mm
F1	2.5 → 8 mm

Materials
NYLON

Manufacturer correspondence*			
FORD Engineering number	W707068S300	FORD Finis	4776106

Manufacturer correspondence*			
JAGUAR	C2S9354	JAGUAR	C2S9354020
JAGUAR	KRS113230	JAGUAR	W707068020
JAGUAR	W707068S300	LAND ROVER	AWR3994
LAND ROVER	RYQ500070	LAND ROVER	W707068S300
LAND ROVER	XH22E864330AA		

* Non contractual information given as indication