1 Allée des Bouleaux -F-95110 SANNOIS
+33 (0)1 39 98 55 00
info@restagraf.com

KUNSTSTOFFNIET Ø 7 mm

Item code	Number of References	Number of pieces	Conditioning
130211	1	8	BEUTEL

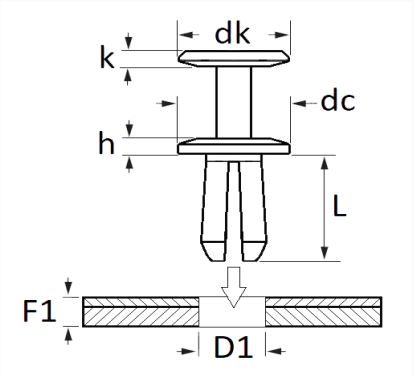

Technical informations	
dk	12 mm
k	1.5 mm
dc	18 mm
h	3.5 mm
L	7.3 mm
D1	7 mm
F1	0.7 → 2 mm

Materials
COPOLYMERES POLYACETAT

Manufacturer correspondence*	
TOYOTA	9046710183

* Non contractual information given as indication