1 Allée des Bouleaux -F-95110 SANNOIS
+33 (0)1 39 98 55 00
info@restagraf.com

KUNSTSTOFFNIET Ø 7 mm

Item code	Number of References	Number of pieces	Conditioning
130209	1	10	BEUTEL

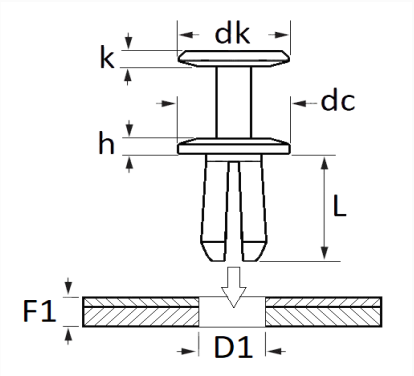

Technical informations	
dk	13.4 mm
k	1.4 mm
dc	20 mm
h	3.4 mm
L	10.5 mm
D1	7 mm
F1	1.8 → 5.9 mm

Materials
COPOLYMERES POLYACETAT

Manufacturer correspondence*	
TOYOTA	9046707215

* Non contractual information given as indication