1 Allée des Bouleaux -F-95110 SANNOIS
+33 (0)1 39 98 55 00
info@restagraf.com

KUNSTSTOFFNIET Ø 10 mm

Item code	Number of References	Number of pieces	Conditioning
130200	1	10	BEUTEL

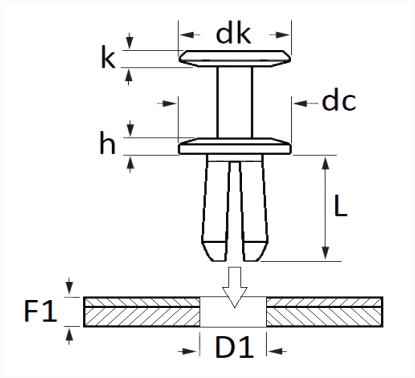

Technical informations	
dk	13.8 mm
k	1.4 mm
dc	19.8 mm
h	3.4 mm
L	12.4 mm
D1	9.5 mm
F1	3 → 5 mm

Materials
POLYAMID 66

Manufacturer correspondence*	
TOYOTA	9046710216

* Non contractual information given as indication