1 Allée des Bouleaux -F-95110 SANNOIS
+33 (0)1 39 98 55 00
info@restagraf.com

PLATTENCLIP Ø 8,2 mm

Item code	Number of References	Number of pieces	Conditioning
130142	1	15	BEUTEL

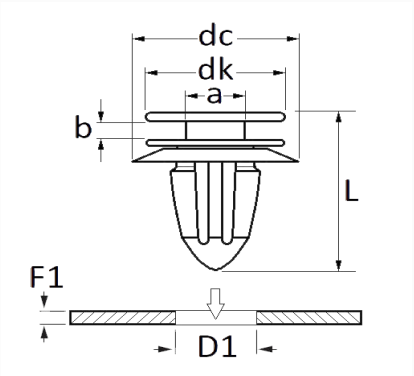

Technical informations	
dk	13 mm
dc	17.5 mm
b	2.9 mm
a	4.5 mm
L	19.5 mm
D1	8.2 mm
F1	0.67 → 1.5 mm

Materials
POLYACETAT UND ELASTOMER