1 Allée des Bouleaux -F-95110 SANNOIS
+33 (0)1 39 98 55 00
info@restagraf.com

DRAIN PLUG GASKET Ø 12 X 17 X 1,5 mm FLAT COPPER

Item code	Number of References	Number of pieces	Conditioning
40876	1	100	TRUCK BOX
7367	1	10	BAG
227367	1	3	BLISTER

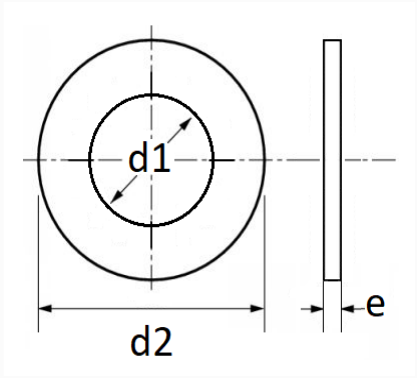

Technical informations	
d1	12 mm
d2	17 mm
e	1.5 mm

Materials
COPPER

Manufacturer correspondence*			
ALTERNATIVE TO FIAT	10298460	ALTERNATIVE TO LAND ROVER	STC3101

Manufacturer correspondence*			
ALTERNATIVE TO OPEL	652541	ALTERNATIVE TO PORSCHE	90012300625
B.M.W	07119963151	LAND ROVER	VYX000040
OPEL Part number	90542183		

* Non contractual information given as indication