1 Allée des Bouleaux -F-95110 SANNOIS
+33 (0)1 39 98 55 00
info@restagraf.com

PLASTIC RIVET Ø 8 mm

Item code	Number of References	Number of pieces	Conditioning
11893	1	8	BAG

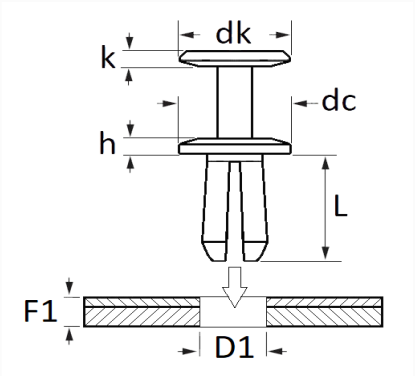

Technical informations	
dk	10 mm
k	2 mm
dc	18 mm
h	2 mm
L	19 mm
D1	8 mm
F1	4 → 15 mm

Materials
POLYAMIDE 6

Manufacturer correspondence*			
FIAT	82421028	SUBSTITUTABLE FOR FIAT	51877375

* Non contractual information given as indication