Restagraf
1 Allée des Bouleaux -F-95110 SANNOIS
+33 (0)1 39 98 55 00
info@restagraf.com

PLASTIC KLINKNAGEL Ø 8 mm



Item code	Number of References	Number of pieces	Conditioning
42666	1	100	
12655	1	10	

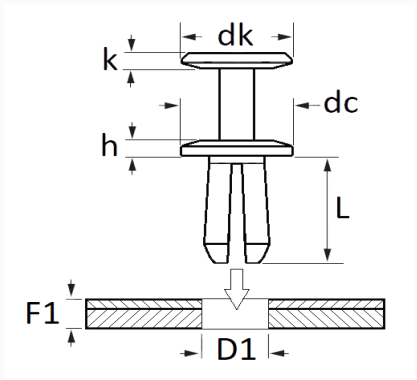

Technical informations	
dk	15 mm
k	1.3 mm
dc	20 mm
h	2 mm
L	14 mm
D1	8 mm
F1	3 → 10 mm

Materials
POLYAMIDE 6

Manufacturer correspondence*			
AUDI	4G0867632	B.M.W	51471911992

Manufacturer correspondence*			
MERCEDES-BENZ	A2019900292	MINI	51471911992
MITSUBISHI	M820141	VOLKSWAGEN	447857909
VOLVO	30820141		

* Non contractual information given as indication