1 Allée des Bouleaux -F-95110 SANNOIS
+33 (0)1 39 98 55 00
info@restagraf.com

STUD MOUNT PLASTIC CABLE TIE 100 X 10 mm Ø 5 → 6 mm

Item code	Number of References	Number of pieces	Conditioning
958	1	40	BAG

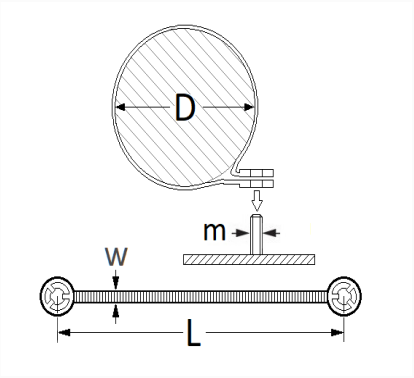

Technical informations	
L	100 mm
W	10 mm
D	28 mm
m	Goujon T5

Materials
POLYAMIDE 66

Manufacturer correspondence*			
PEUGEOT / CITROËN	698052	RENAULT	7705027001

* Non contractual information given as indication