1 Allée des Bouleaux -F-95110 SANNOIS
+33 (0)1 39 98 55 00
info@restagraf.com

SPRING PIN Ø 6,2 X 40 mm DOOR HINGE

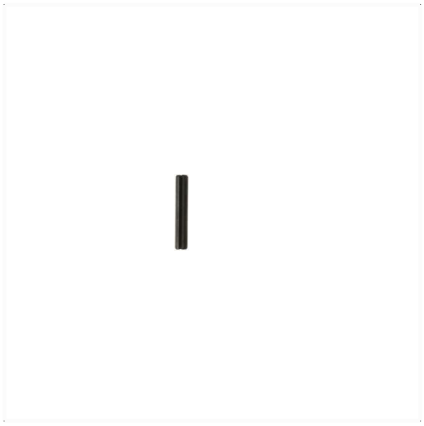

Item code	Number of References	Number of pieces	Conditioning
922	1	22	BAG

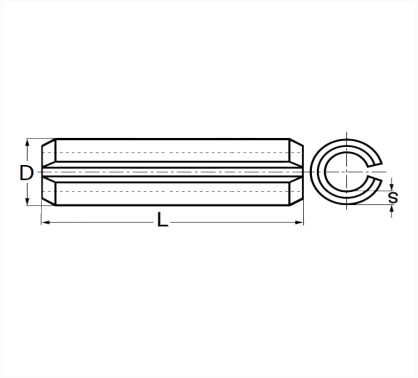

Technical informations	
L	40 mm
D	6.3 mm
s	1 mm

Materials
XC75 STEEL

Manufacturer correspondence*			
RENAULT	0008446364	RENAULT	0008546662

Manufacturer correspondence*	
RENAULT	7703067177

* Non contractual information given as indication