1 Allée des Bouleaux -F-95110 SANNOIS
+33 (0)1 39 98 55 00
info@restagraf.com

SORTIMENT GROßKOPFNIETEN LACKIERT Ø 4 X 16 mm KENNZEICHEN

Item code	Number of References	Number of pieces	Conditioning
228445	3	8	BLISTER

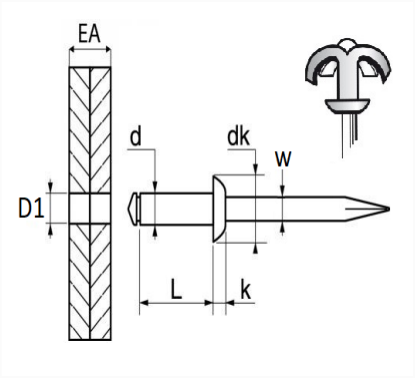

Technical informations	
d	4 mm
L	16 mm
dk	8 mm
k	1.2 mm
w	2.25 mm
EA	4 → 11 mm
D1	4.2 mm

Materials
ALUMINIUM/STAHLSTANGE