1 Allée des Bouleaux -F-95110 SANNOIS
+33 (0)1 39 98 55 00
info@restagraf.com

NYLON CAGE NUT M6-1.00

Item code	Number of References	Number of pieces	Conditioning
228345	1	4	BLISTER
405	1	25	BAG

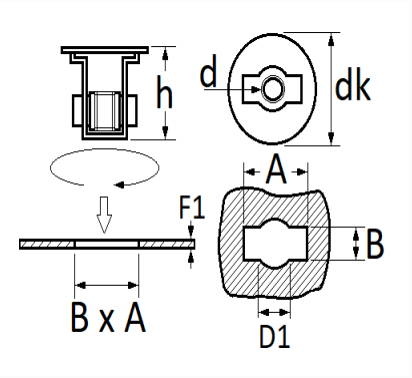

Technical informations	
dk	18 mm
h	12 mm
d	M6 x 1.00
B	4.6 mm
A	14.7 mm
D1	10.4 mm
F1	0.7 → 2.5 mm

Materials
NYLON & STEEL

Manufacturer correspondence*			
FIAT	14116890	NISSAN	0122100Q0J

Manufacturer correspondence*			
PEUGEOT / CITROËN	694111	RENAULT	7703044087
RENAULT	7703044181	RENAULT SAMSUNG MOTORS	332810

* Non contractual information given as indication