1 Allée des Bouleaux -F-95110 SANNOIS
+33 (0)1 39 98 55 00
info@restagraf.com

BLACK ZINC PLATED DOME HEAD SELF TAPPING SCREW WITH WASHER Ø 4,2 X 16 mm

Item code	Number of References	Number of pieces	Conditioning
228280	1	6	BLISTER
776	1	50	BAG

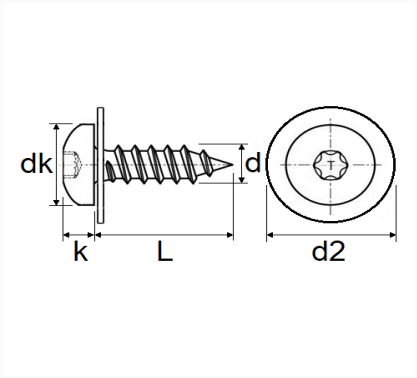

Technical informations	
dk	8 mm
k	3.1 mm
L	16 mm
d	4.2 mm
d2	16 mm
T	X20

Materials
STEEL

Manufacturer correspondence*			
NISSAN	0146100Q0K	SUBSTITUTABLE FOR RENAULT	7703016575

* Non contractual information given as indication