1 Allée des Bouleaux -F-95110 SANNOIS
+33 (0)1 39 98 55 00
info@restagraf.com

PLASTIC RIVET Ø 6,2 → 6,5 mm

Item code	Number of References	Number of pieces	Conditioning
228168	1	4	BLISTER
12640	1	8	BAG
42713	1	100	BOX

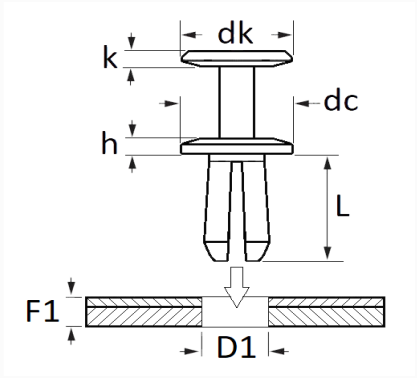

Technical informations	
dk	16 mm
k	1.2 mm
dc	18 mm
h	2.5 mm
L	20 mm
D1	6.25 → 6.5 mm
F1	4.5 → 7 mm

Materials
POLYAMIDE 66

Manufacturer correspondence*			
CHRYSLER - JEEP	6509049AA	FORD Engineering number	W714040S300

Manufacturer correspondence*			
FORD Finis	4902755	OPEL (GM) Catalog number	4803500
OPEL (Stellantis)	YQ00010280	OPEL Part number	11589290
PEUGEOT / CITROËN	YQ00210280		

* Non contractual information given as indication