1 Allée des Bouleaux -F-95110 SANNOIS
+33 (0)1 39 98 55 00
info@restagraf.com

PLASTIC RIVET Ø 8 → 8,3 mm

Item code	Number of References	Number of pieces	Conditioning
228162	1	4	BLISTER
11470	1	15	BAG
42621	1	100	BOX

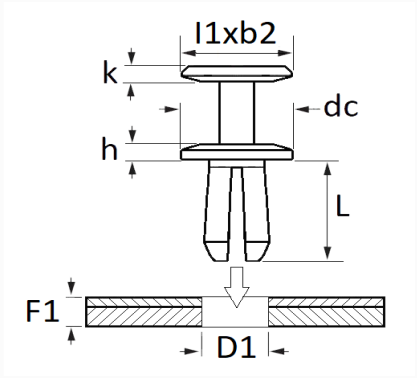

Technical informations	
l1	20 mm
b2	8.6 mm
k	2.3 mm
dc	20 mm
h	2.8 mm
L	13 mm
D1	8 → 8.3 mm
F1	2 → 7.5 mm

Materials
POLYAMIDE 66

Manufacturer correspondence*			
AUDI	WHT004750	CITROËN	YL01356380

Manufacturer correspondence*			
DS Automobiles	1622749580	FIAT	51834606
OPEL (Stellantis)	1622749580	OPEL Part number	3636996
PEUGEOT / CITROËN	1609267280	PEUGEOT / CITROËN	1622749580
PEUGEOT / CITROËN	856553	RENAULT	7703072416
TOYOTA	SU001A7051	VOLKSWAGEN	WHT004750
VOLVO	994528		

* Non contractual information given as indication