Restagraf
1 Allée des Bouleaux -F-95110 SANNOIS
+33 (0)1 39 98 55 00
info@restagraf.com

PLATTENCLIP Ø 8 mm TÜRVERKLEIDUNG



Item code	Number of References	Number of pieces	Conditioning
228103	1	5	BLISTER
12160	1	10	BEUTEL

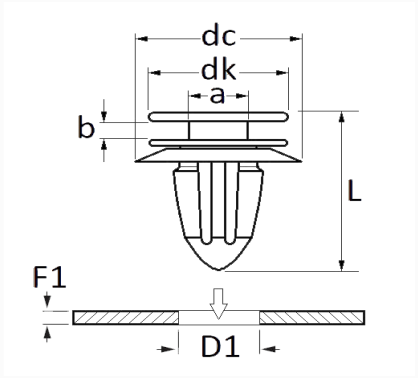

Technical informations	
dk	14.5 mm
dc	18 mm
b	2.5 mm
a	6 mm
L	20.5 mm
D1	8 mm
F1	1.7 mm

Materials
HOMOPOLYMERES POLYACETAT

Manufacturer correspondence*			
B.M.W	51430141025	B.M.W	51437001492

Manufacturer correspondence*	
MINI	51430141025

* Non contractual information given as indication