1 Allée des Bouleaux -F-95110 SANNOIS
+33 (0)1 39 98 55 00
info@restagraf.com

PANEL CLIP Ø 8,2 → 8,5 mm INTERIOR AND EXTERIOR TRIM

Item code	Number of References	Number of pieces	Conditioning
228082	1	5	BLISTER
10445	1	15	BAG

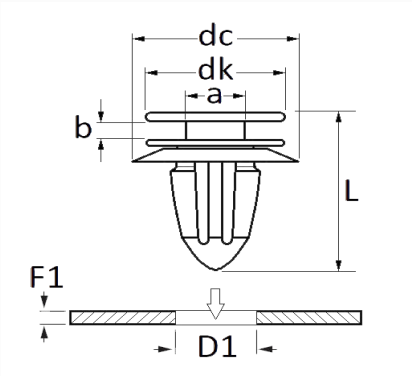

Technical informations	
dk	12.5 mm
dc	18.2 mm
b	2 mm
a	6 mm
L	19 mm
D1	8.2 → 8.5 mm
F1	0.7 → 2.5 mm

Materials
POLYACETAL COPOLYMER

Manufacturer correspondence*			
FORD Engineering number	W710404S300	FORD Finis	1473596

Manufacturer correspondence*			
RENAULT	7701049008	RENAULT	7701057132
RENAULT	8200702219		

* Non contractual information given as indication