1 Allée des Bouleaux -F-95110 SANNOIS
+33 (0)1 39 98 55 00
info@restagraf.com

CLIP HOSE CLAMP Ø 21 mm L = 8 mm

Item code	Number of References	Number of pieces	Conditioning
227583	1	2	BLISTER
7583	1	10	BAG

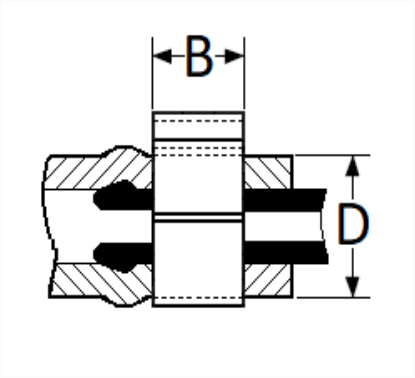

Technical informations	
D	21.5 → 23 mm
B	8 mm

Materials
X5Cr Ni18/10 STAINLESS STEEL