1 Allée des Bouleaux -F-95110 SANNOIS
+33 (0)1 39 98 55 00
info@restagraf.com

KLEMBEUGEL MET QUICK RELEASE Ø 16 mm L = 8 mm

Item code	Number of References	Number of pieces	Conditioning
227578	1	2	
7578	1	10	

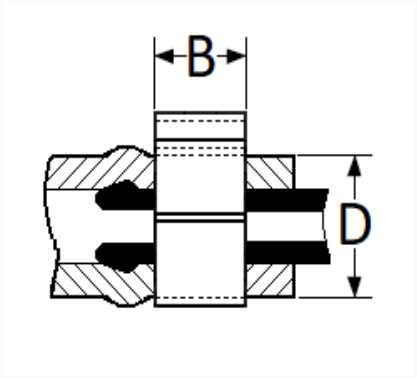

Technical informations	
D	16.5 → 18 mm
B	8 mm

Materials
ROESTVRIJ STAAL X5Cr Ni18/10