1 Allée des Bouleaux -F-95110 SANNOIS
+33 (0)1 39 98 55 00
info@restagraf.com

CLIPSRING Ø 13 mm L = 8 mm

Item code	Number of References	Number of pieces	Conditioning
227575	1	2	BLISTER
7575	1	10	BEUTEL

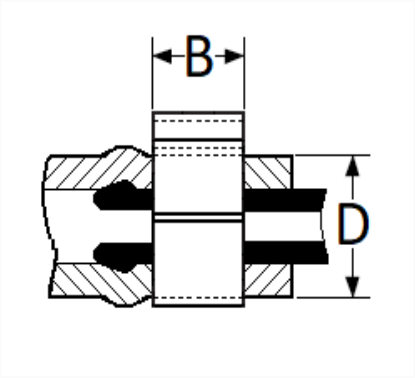

Technical informations	
D	13.5 → 15 mm
B	8 mm

Materials
EDELSTAHL X5CR NI18/10