1 Allée des Bouleaux -F-95110 SANNOIS
+33 (0)1 39 98 55 00
info@restagraf.com

CLIPSRING Ø 10 mm L = 7 mm

Item code	Number of References	Number of pieces	Conditioning
227572	1	2	BLISTER
7572	1	10	BEUTEL

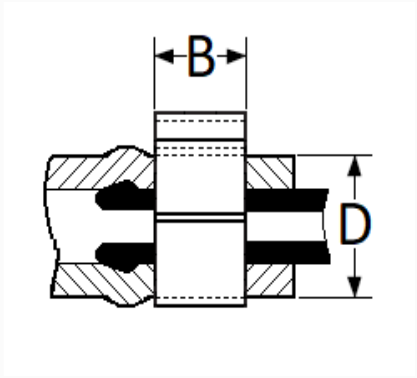

Technical informations	
D	10.5 → 11.5 mm
B	7 mm

Materials
EDELSTAHL X5CR NI18/10