1 Allée des Bouleaux -F-95110 SANNOIS
+33 (0)1 39 98 55 00
info@restagraf.com

MINI WORM DRIVE HOSE CLAMP Ø 8 → 10 mm L = 9 mm

Item code	Number of References	Number of pieces	Conditioning
7509	1	15	BAG

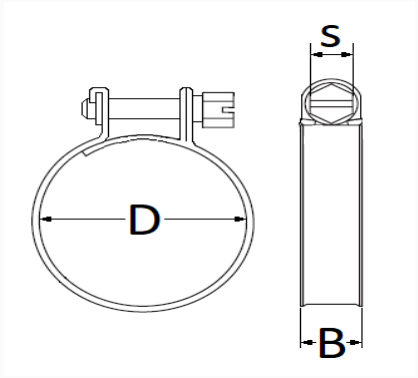

Technical informations	
D	8 → 10 mm
B	9 mm
s	7 mm

Materials
STEEL