1 Allée des Bouleaux -F-95110 SANNOIS
+33 (0)1 39 98 55 00
info@restagraf.com

DRAIN PLUG SEAL Ø 14 X 20 X 2 mm COPPER RING



Item code	Number of References	Number of pieces	Conditioning
227371	1	4	BLISTER
7371	1	10	BAG
40856	1	100	BOX

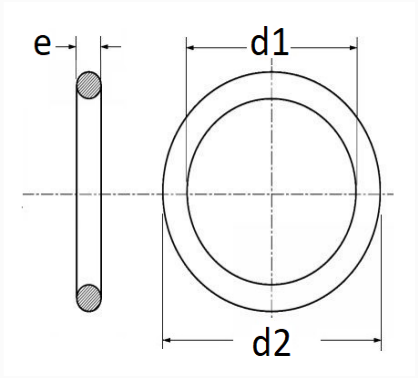

Technical informations	
d1	14 mm
d2	20 mm
e	2 mm

Materials
COPPER

Manufacturer correspondence*			
ALTERNATIVE TO FORD	1250324	ALTERNATIVE TO HYUNDAI	2151329000

Manufacturer correspondence*			
ALTERNATIVE TO NISSAN	110266F900	ALTERNATIVE TO TOYOTA	SU00100188
ALTERNATIVE TO VOLKSWAGEN	N0138157	ALTERNATIVE TO VOLKSWAGEN	N0138158
ALTERNATIVE TO VOLVO	30725034	FIAT	9400313279
PEUGEOT / CITROËN	031327	PEUGEOT / CITROËN	221914
RENAULT SAMSUNG MOTORS	0321225	RENAULT SAMSUNG MOTORS	0321425
ROVER	GUG705579GM	SUZUKI	1399666G00
VOLKSWAGEN	N0138156		

* Non contractual information given as indication