1 Allée des Bouleaux -F-95110 SANNOIS
+33 (0)1 39 98 55 00
info@restagraf.com

GRADE 8 SELF LOCKING NUT WITH NYLON INSERT M16-2.00 DIN 982

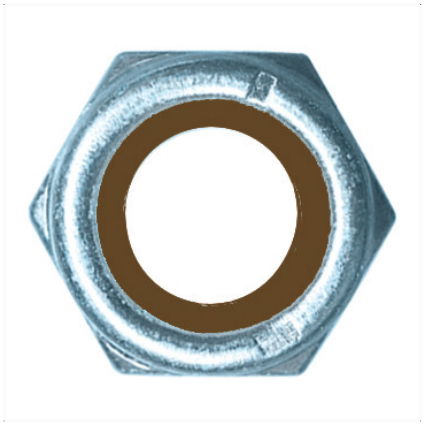

Item code	Number of References	Number of pieces	Conditioning
847	1	3	BAG

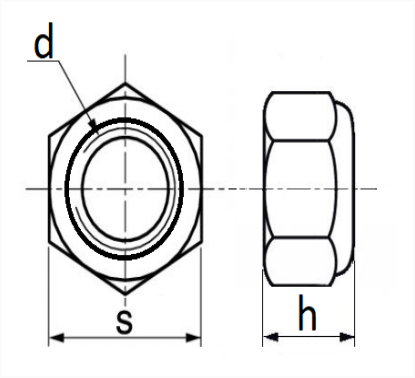

Technical informations	
s	24 mm
h	19.1 mm
d	M16 x 2.00

Materials
CLASS 8 STEEL

Manufacturer correspondence*	
RENAULT	5003034021

* Non contractual information given as indication