1 Allée des Bouleaux -F-95110 SANNOIS
+33 (0)1 39 98 55 00
info@restagraf.com

DRAIN PLUG SEAL Ø 14,3 X 19 X 2 mm COPPER RING



Item code	Number of References	Number of pieces	Conditioning
227349	1	4	BLISTER
7349	1	10	BAG
40853	1	100	BOX

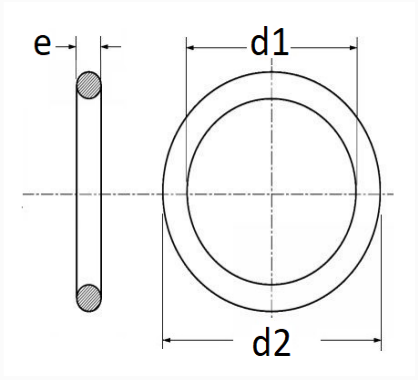

Technical informations	
d1	14.3 mm
d2	19 mm
e	2 mm

Materials
COPPER